Parts Catalog



SP30P

Mixer

Model: SP30P

11/25/2025 Rev. E
IMPORTANT!
TO EXPEDITE SHIPMENT OF PARTS, ALWAYS SPECIFY MODEL, REV, PART NUMBER, AND SERIAL NUMBER OF UNIT.

GLOBE FOOD EQUIPMENT COMPANY

2215 East River Road
Dayton, Ohio 45439

Parts Department
Toll Free 1-800-745-6238
E-Mail: info@globefoodequip.com
Website: www.globefoodequip.com

Not for resale

© Globe Food Equipment Company, 2025

Table of Contents

Description	Page
SP30P Base, Crank Style Components	4
SP30P Base Level Style Components	8
SP30P Head Components	12
SP30P Hub Components	16
SP30P Planetary Components	18
SP30P Gearbox Components	20
SP30P Motor Components	24
SP30P Manual and Digital Components	26
SP30P Bowl Scraper Components	28
SP30P Wiring Diagram, 220V Single Phase	30
SP30P Wiring Diagram, Single Phase, Digital Timer	31
SP30P Wiring Diagram	32

SP30P Base, Crank Style Components

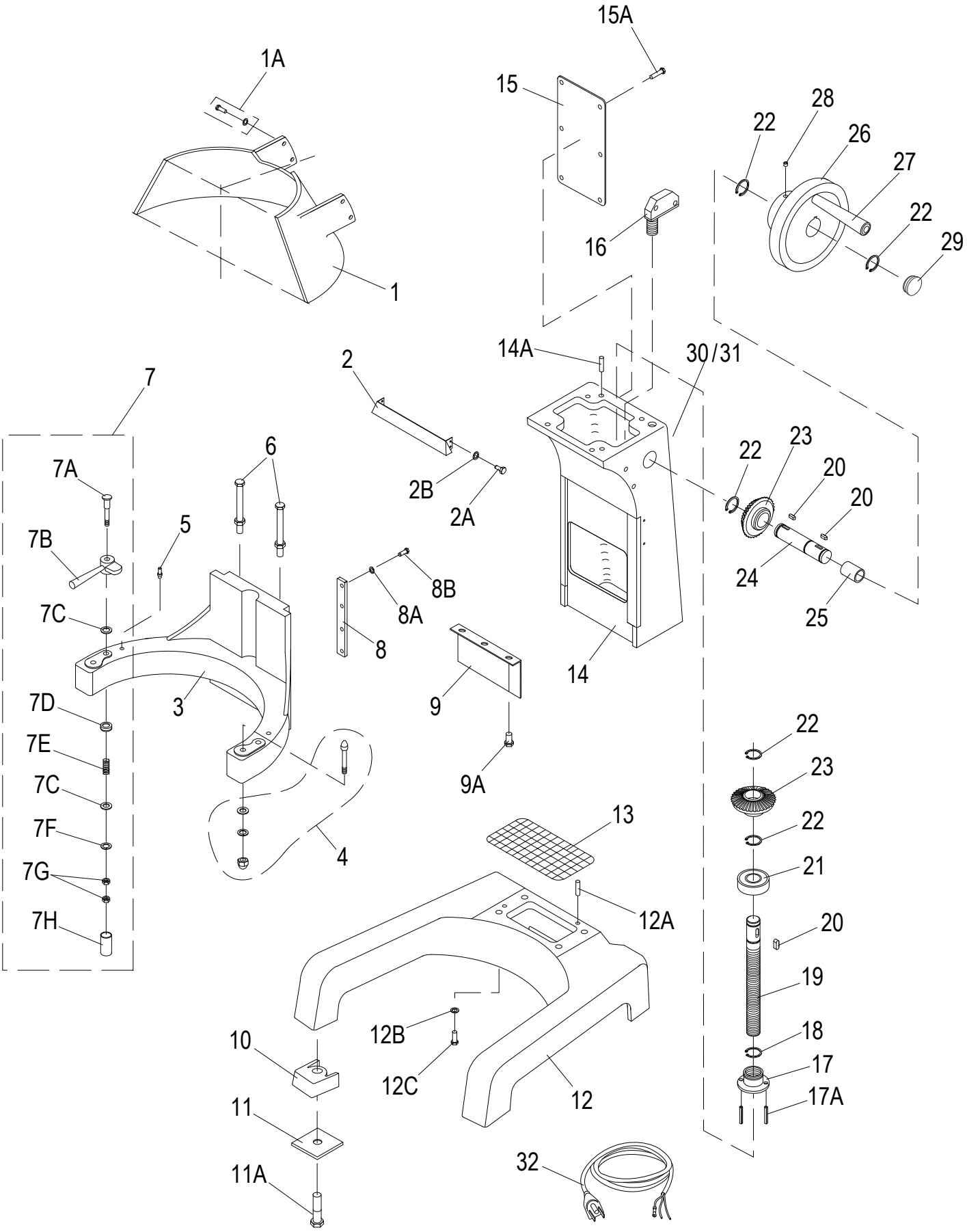

© Globe Food Equipment Company

SP30P Base, Crank Style Components

Item	Part Number	Description	Qty	Serial Number
1	X30036	Rear Guard	1	
1A	X30101	Screw & Washer Kit	4	
2	X30102	Mixer Column Cover	1	
2A	X40056	Truss Hd Screw PHH M6-1.0x10mm, SS-18	5	
2B	X25069	Thick Flat Washer, Zinc M6, OD-24mm, TH-3mm	3	
3	X30034	Bowl Cradle	1	
4	X30109	Dowel Screw Kit	2	
4A		Dowel Screw	2	
4B	X01372	Lock Washer,SS M12, OD-21mm, TH-2.5mm	2	
4C	X02617	Flat Washer, SS M12,OD-29mm, Th-1mm	2	
4D	X40110	Acorn Nut, Zn, M12-1.75, OD-19mm, TH-22mm	2	
5	X30167	Stop Pin	2	
6	X40106	Screw M10x54mm Hex Hd/Nut (Touch Shaft)	1	
6A	X30106A	Upper Limit Bowl Stop M8X1.25, 68mm Bolt & Nut	1	
7	X30033	Bowl Clamp Kit (2/Set)	1	
7A	X30108	Hardware Kit	2	
7B	X30033-2	Bowl Clamp (2/Set)	1	
7C	X01370	Flat Washer, Zinc M13, OD-25mm, TH-2mm	4	
7D		Hardware Cap Retainer	2	
7E		Spring	2	
7F	X01372	Lock Washer,SS M12, OD-21mm, TH-2.5mm	2	
7G	X30215	Hex Nut M12-1.75, Zn, OD-19mm, TH-10mm	4	
7H		Hardware Cap	2	
8	X30035	Slide Guide	2	
8A	X08101	Flat Washer, Zinc M8, OD-16mm,TH-1.5mm	8	
8B	H00196	Screw	8	
9	X30164	Cover	1	
9A	X25150	Ext. Hex Hd Screw M6-1.0X14mm, SS	3	
10	X30162-163	Foot Kit (4/Set)	1	
11		Shipping Washer	4	
11A	X30039	Bolt & Washer Kit (For Shipping)	4	
12	X30038-DG	Base	1	
12	X30038	Mixer Base	1	
12A	X40040	Dowel Pin, SS, OD-8mm, L-29mm	2	
12B	X01370	Flat Washer, Zinc M13, OD-25mm, TH-2mm	4	
12C	X80B04	Ext. Hex Hd Screw, B.O., M12-1.75x40mm	4	
13	X30037	Screen	1	
14	X30042-DG	Mixer Column	1	
14	X30042	Mixer Column	1	
14A	X30178	Dowel Pin, SS	2	
15	X30055	Back Plate	1	
15A	X30056	Truss Hd Screw, Phllips M5-0.8x12mm, SS	8	
16	X30051	Microswitch	1	
17	X30104	Screw Sleeve	1	
17A	X30105	Slotted Sping Pin, B.O. OD-4mm, L-30mm, TH-1mm	2	
18	X25145	Int. Retaining Ring, B.O. ID-36mm, OD-40mm, TH-1.5mm	1	
19	X30041	Bowl Lift Screw	1	
20	X20123	Round End Key H-5mm, W-5mm, L-18mm	3	
21	X30043	Bearing (6005LU)	1	
22	X30044	Ext. Retaining Ring, B.O. ID--23mm, OD-25mm, TH-1mm	5	
23	X30045	Oblique Gear (30T)	2	
24	X30047	Shaft	1	
25	X30050	Oilless Bearing	1	

© Globe Food Equipment Company

SP30P Base, Crank Style Components

Item	Part Number	Description	Qty	Serial Number
26		Hand Wheel Assy W/Hardware, Old Style	1	
26	X30053	Hand Wheel Assy W/Hardware, New Style	1	
27	X30053-1	Handle Kit	1	
28		Set Screw M10x8mm Cup Pt.	1	
29		Hand Wheel Cap	1	
30	X91014	Hazardous Voltage Label	1	
31	952-12	Strain Relief, Liquid Tight	1	
32	X30155P	Power Cord, 220V Mixer	1	

© Globe Food Equipment Company

INTENTIONALLY LEFT BLANK PAGE

© Globe Food Equipment Company

SP30P Base Level Style Components

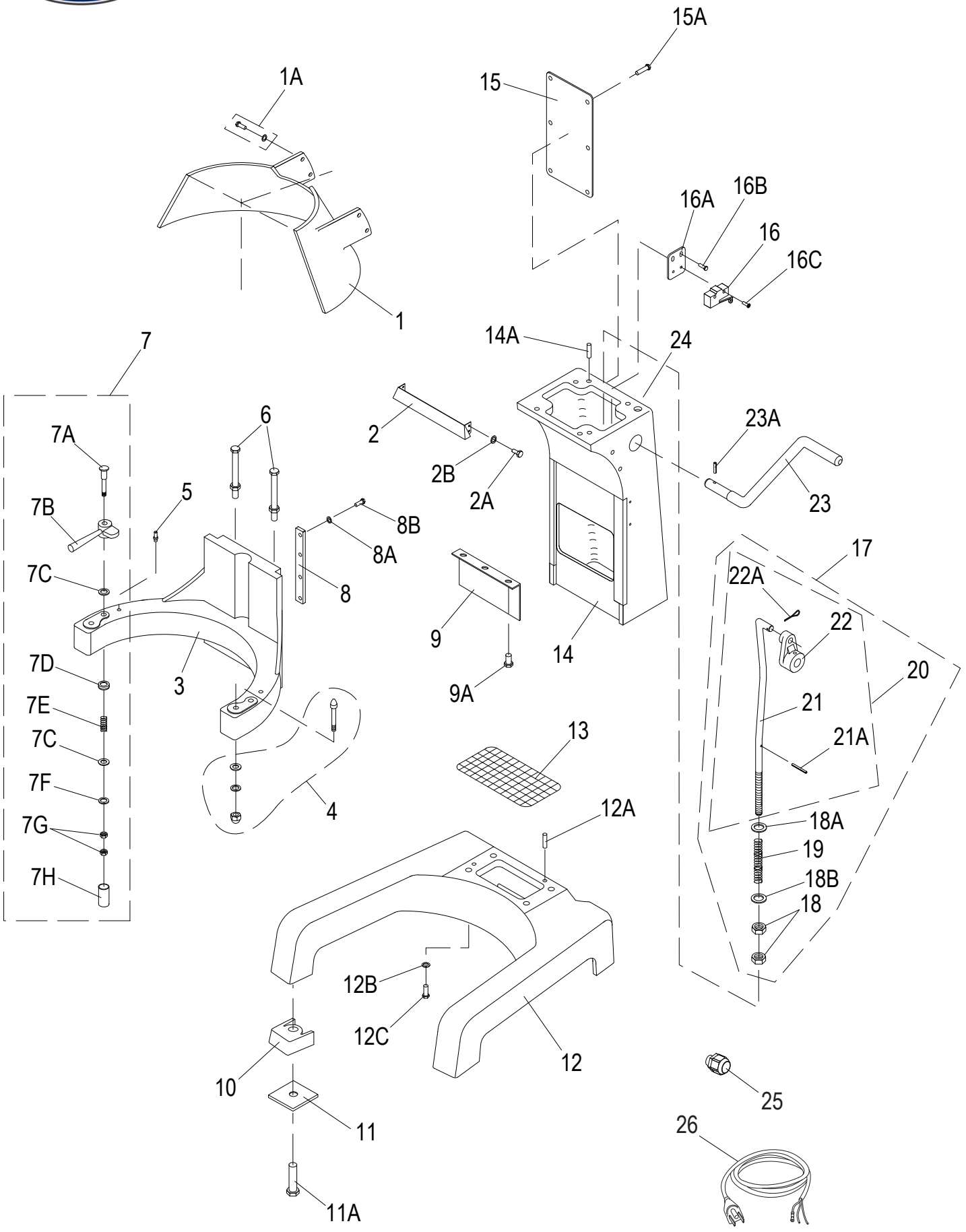

© Globe Food Equipment Company

SP30P Base Level Style Components

Item	Part Number	Description	Qty	Serial Number
1	X30036	Rear Guard	1	
1A	X30101	Screw & Washer Kit	4	
2	X30102	Mixer Column Cover	1	
2A	X40056	Truss Hd Screw PHH M6-1.0x10mm, SS-18	5	
2B	X25069	Thick Flat Washer, Zinc M6, OD-24mm, TH-3mm	3	
3	X30034-1	Bowl Cradle - Lever Style	1	
3	X30034-DG	Bowl Cradle	1	7314991 ->
4	X30109	Dowel Screw Kit (Incl. items 4A-4D)	2	
4A		Dowel Screw	2	
4B	X01372	Lock Washer,SS M12, OD-21mm, TH-2.5mm	2	
4C	X02617	Flat Washer, SS M12,OD-29mm, Th-1mm	2	
4D	X40110	Acorn Nut, Zn, M12-1.75, OD-19mm, TH-22mm	2	
5	X30167	Stop Pin	2	
6	X40106	Screw M10x54mm Hex Hd/Nut (Touch Shaft)	1	
7	X30033	Bowl Clamp Kit (2/Set) (Incl. items 7A-7H)	1	
7A	X30108	Hardware Kit	2	
7B	X30033-2	Bowl Clamp (2/Set)	1	
7C	X02617	Flat Washer, SS M12,OD-29mm, Th-1mm	4	
7D		Hardware Cap Retainer	2	
7E		Spring	2	
7F	X01372	Lock Washer,SS M12, OD-21mm, TH-2.5mm	2	
7G	X30215	Hex Nut M12-1.75, Zn, OD-19mm, TH-10mm	4	
7H		Hardware Cap	2	
8	X30035	Slide Guide	2	
8A	X08101	Flat Washer, Zinc M8, OD-16mm,TH-1.5mm	8	
8B	H00196	Screw	8	
9	X30164	Cover	1	
9A	X25150	Ext. Hex Hd Screw M6-1.0X14mm, SS	3	
10	X30162-163	Foot Kit (4/Set)	1	
11		Shipping Washer	1	
11A	X30039	Bolt & Washer Kit (For Shipping)	1	
12	X30038	Mixer Base	4	
12	X30038-DG	Base	1	7314991 ->
12A	X30178	Dowel Pin, SS	2	
12B	X01372	Lock Washer,SS M12, OD-21mm, TH-2.5mm	4	
12C	X80B04	Ext. Hex Hd Screw, B.O., M12-1.75x40mm	4	
13	X30037	Screen	1	
14	X00647	Column, Lever Style	1	
14A	X30178	Dowel Pin, SS	2	
15	X30055	Back Plate	1	
15A	X30056	Truss Hd Screw, Phllips M5-0.8x12mm, SS	8	
16	X30219	Microswitch	1	
16A	X30216	Bracket	1	
16B	X40056	Truss Hd Screw PHH M6-1.0x10mm, SS-18	2	
16C	X30218	Pan Head Screw, Phillips M4-0.7x25mm	2	
17	X30211A	Bowl Lift Kit (Incl. items 17-21A)	1	
18	X30215	Hex Nut M12-1.75, Zn, OD-19mm, TH-10mm	2	
18A	X30213	Oversized Flat Washer, Zinc M14, OD-34mm, TH-2.5mm	2	
18B	X01370	Flat Washer, Zinc M13, OD-25mm, TH-2mm	1	
19	X30214	Spring	1	
20	X01371	Lift Rod Assembly (Incl. items 20-21A)	1	
21	X30211	Bowl Lift Rod	1	
21A	X30105	Slotted Sping Pin, B.O. OD-4mm, L-30mm, TH-1mm	1	

© Globe Food Equipment Company

SP30P Base Level Style Components

Item	Part Number	Description	Qty	Serial Number
22		Bowl Lift Cam	1	
22A		Cotter Pin	1	
23	X30208	Handle	1	
23A	X30209	Dowel Pin (1/2 Knurled), B.O. OD-6mm/6.25mm, L-35mm	1	
24	X91014	Hazardous Voltage Label	1	
25	X02528	Strain Relief (Not Shown)	1	
26	X30155P	Power Cord, 220V Mixer (Not Shown)	1	
27	X00667	Power Cord (480V) (Not Shown)	1	

© Globe Food Equipment Company

INTENTIONALLY LEFT BLANK PAGE

© Globe Food Equipment Company

SP30P Head Components

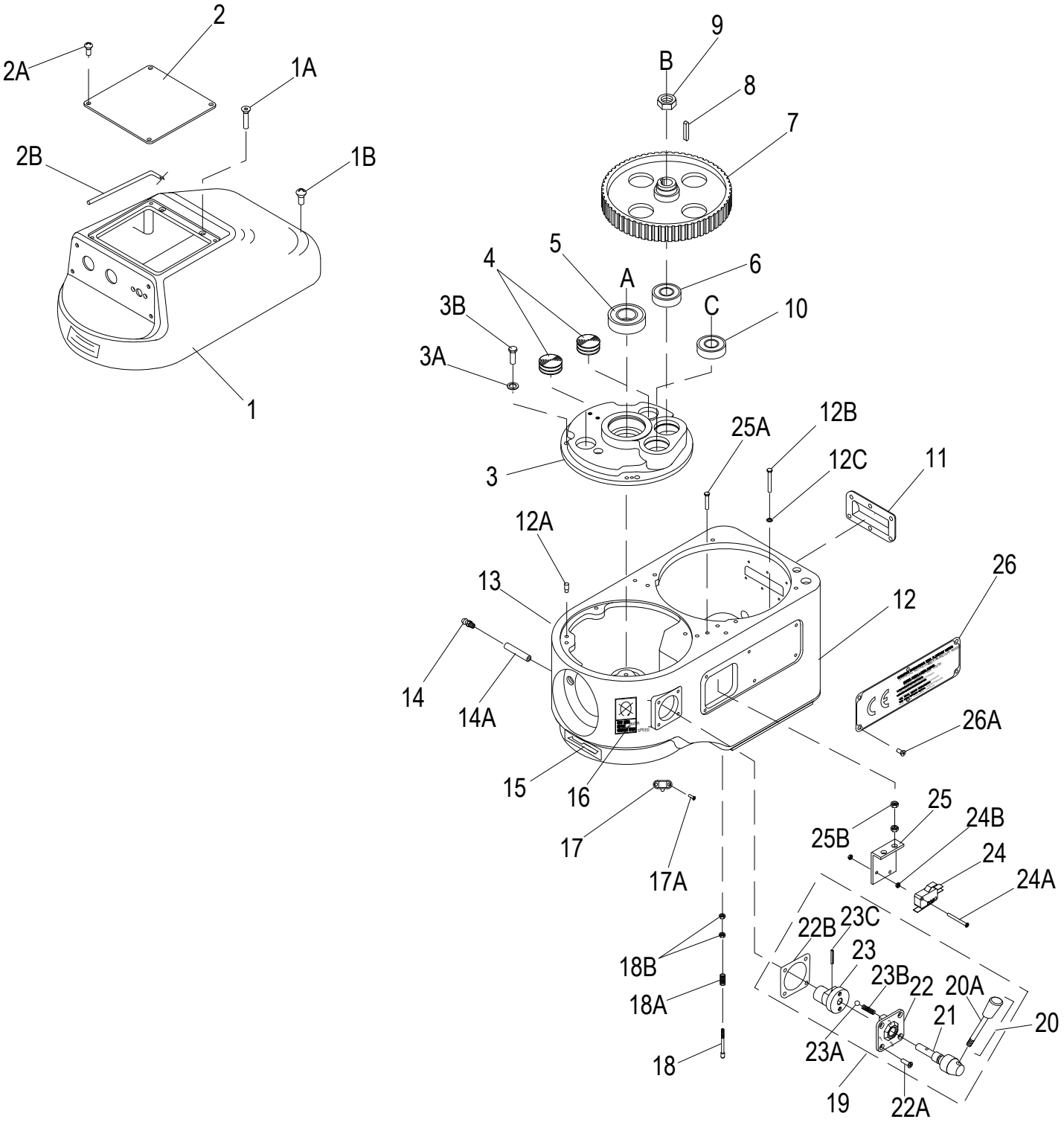

© Globe Food Equipment Company

SP30P Head Components

Item	Part Number	Description	Qty	Serial Number
1	X30004	Cover, Transmission	1	
1	X30004-DG	Top Cover	1	
1A	X30207	Flat Hd Screw-Socket M8-1.25x108mm, B.O.	2	
1B	X30220	Flat Hd Screw-Socket M6-1.0x90mm, B.O.	1	
2	X30002	Cover	1	
2A	X40056	Truss Hd Screw PHH M6-1.0x10mm, SS-18	6	
2B	X30003	Gasket	1	
3	X30077	Gear Cover	1	
3A	X30198	Lock Washer M8, OD-13mm, TH-2mm	4	
3B	X30197	Ext. Hex Hd Screw SS, M8-1.25x25mm	4	
4	X10073	Oil Plug	2	
5	X30024	Bearing (6206Z)	1	
6	X10012	Bearing (6204Z)	1	
7	X30080	Gear Wheel	1	
8	X30081	Round End Key H-6mm, W-6mm, L-30mm	1	
9	X30147	Thin Hex Nut M16-1.5, OD-24, TH-8, Zn	1	
10	X10012	Bearing (6204Z)	1	
11	X30076	Screen Plate	1	
12	X30087	Transmission Case, Fixed Bowl Guard	1	
12	X30087-1	Transmission Case	1	
12A		Dowel Pin, Threaded	2	
12B	X30010	Cap Hd Screw, Hex M8-1.25X90mm, B.O.(1/2 Thread (Not Shown)	1	
13	X91009	Gear Maintenance Label	1	
14	X10900	Grease Fitting	1	
14A	X10217	Grease Tube w/o Zert	1	
15	X91012	Arrow Label	1	
16	X91010	Gear Damage Label	1	
17	X10134	Spring Lock Assembly	1	
17A	X10134A	Lock Washer, SS M3, OD-6mm, TH-1mm	2	
17B	X10134B	Round Hd Screw-PHH M3-0.5x8mm, SS	1	
18	X30096	Touch Shaft Assembly-Brass	1	
18	X30096N	Nylon Touch Shaft Kit	1	
18A	X30095	Spring	1	
18B	X40187	Support Tube	1	
18C	X30186	Hex Nut, Zinc M5-0.8 OD-8, TH-4mm	2	
19	X30057-60	Gear Shift Kit (Incl. items 20-23C)	1	
20	X30057	Lever With Knob	1	
20A	X30057-1	Knob	1	
21		Shaft	1	
22		Cover	1	
22A	X30179	Flat Hd Screw,Hex M6-1.0x16mm	4	
22B	X30059-1	Gasket	1	
23		Shaft Bias	1	
23A		Roller	2	
23B		Spring	2	
23C		Roll Ø3x28mm Pin	1	
24	X10057	Microswitch	1	
24A	854-2	Screw	2	
24B	854-3	Nut	4	
25	X30062	Bracket	1	
25A	X80J16	Ext. Hex Hd Screw M6x1.0x20 mm SS	2	
25B	X08015	Lock Nut, Zinc M6-1.0, OD-10mm, TH-6mm	4	
26	X30066	Injury Warning Plate	1	

© Globe Food Equipment Company

SP30P Head Components

Item	Part Number	Description	Qty	Serial Number
26A	X30065	Truss Hd Screw-Phillips M5-0.8x10mm, SS	4	

© Globe Food Equipment Company

INTENTIONALLY LEFT BLANK PAGE

© Globe Food Equipment Company

SP30P Hub Assembly Components

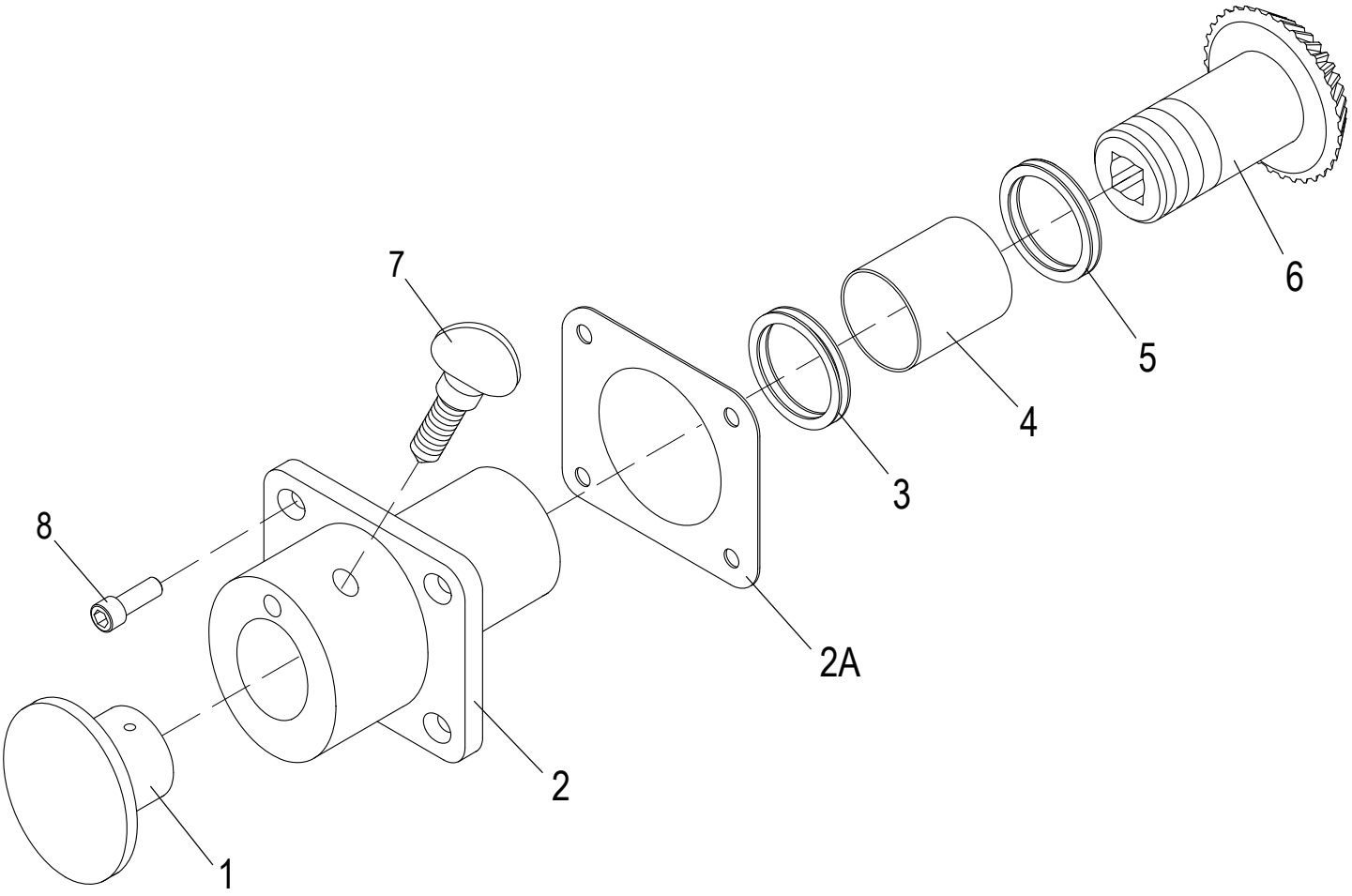

© Globe Food Equipment Company

SP30P Hub Assembly Components

Item	Part Number	Description	Qty	Serial Number
1	X10007	Hub Plug	1	
2	X30017	Attachment Hub	1	
2	X30017-DG	Hub Assembly	1	
2A	X80B48	Gasket	1	
3	X10089	Oil Seal ID-35mm, OD-45mm, TH-8mm	1	
4	X10075	Needle Bearing	1	
5	X30018-1	Flat Washer, Zinc ID-35mm, OD-55mm, TH-1mm	2	
6	X30014	Lever Gear (35T)	1	
7	X10005	Thumb Screw (TS 1/2"-#12)	1	
8	H00012	Socket Head Cap Screw M6 x 26mm - BO	4	

© Globe Food Equipment Company

SP30P Planetary Components

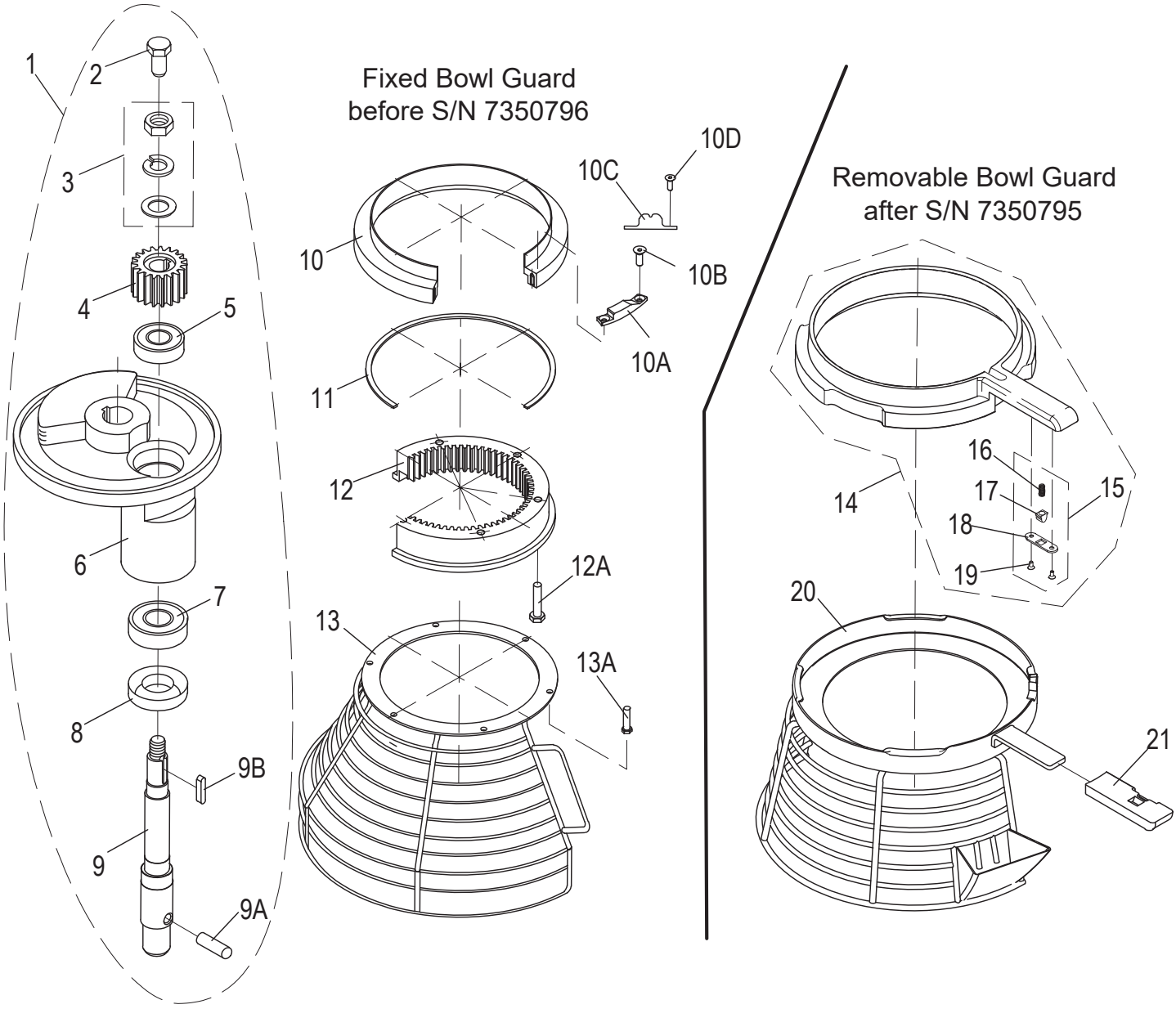

© Globe Food Equipment Company

SP30P Planetary Components

Item	Part Number	Description	Qty	Serial Number
1	X30019-28	Planetary Assembly (Incl. items 2-9B)	1	
2	X30019	Ext. Hex Hd Screw M10-1.5x25mm, B.O.	1	
3	X30020	Washer & Nut Kit	1	
4	X30021	Pinion Gear (21T)	1	
5	X10012	Bearing (6204Z)	1	
6	X30023	Planetary Shaft Holder	1	
6	X30023-DG	Planetary Holder	1	
7	X30024	Bearing (6206Z)	1	
8	X30025	Oil Seal	1	
9	X30027	Planetary Shaft	1	
9		Planetary Shaft, Internal Thread (Old Style)	1	
9A	X30028	Dowel Pin M12x17mm	1	
9B	X30026	Round End Key W-6mm, L-17mm	1	
10	X30090P	Slide Sheath, Plastic	1	7350795 ->
10A	X10041	Touch Mass	1	7350795 ->
10B	X10042	Flat Hd Screw-Phillips M4-0.7x10mm, Zn	2	7350795 ->
10C	X10135	Spring Lock Fixture	1	7350795 ->
10D	X10179	Cheese Hd Screw, Phillips M4-0.7X10mm, SS	2	7350795 ->
11	X30091	Teflon Mat	1	7350795 ->
12	X30092	Ring Gear (67T)	1	
12A	X30099	Cap Hd Screw, Hex, B. O., M8-1.25x35mm	6	
13	X30093-94	Front Interlocking Guard Assy	1	->7350796
13A	X10083	External Hex Hd Screw, SS, M5-0.8X10mm	6	->7350796
14	X300S2	Slide Sheath (Incl. items 15-19)	1	->7350796
15	X200S3	Spring Lock Kit	1	->7350796
16		Spring	1	->7350796
17		Plunger	1	->7350796
18		Plate, Plunger Retention	1	->7350796
19	X10134B	Round Hd Screw-PHH M3-0.5x8mm, SS	2	->7350796
20	X300S1	Removable Bowl Guard	1	->7350796
21	X30504	Plastic Handle	1	->7350796

© Globe Food Equipment Company

SP30P Gearbox Components

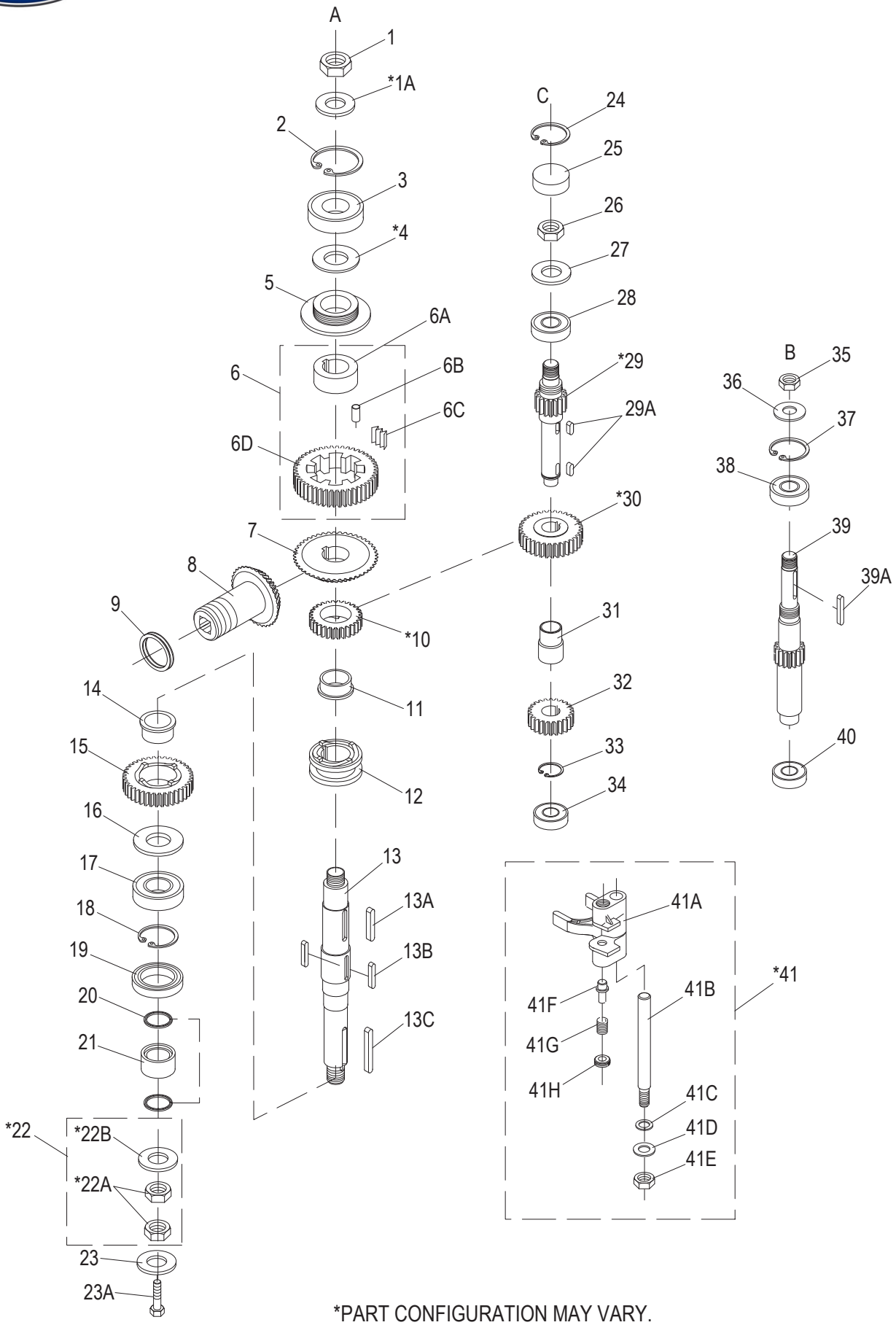

*PART CONFIGURATION MAY VARY.

© Globe Food Equipment Company

SP30P Gearbox Components

Item	Part Number	Description	Qty	Serial Number
1	X30111	Thin Hex Nut M20-1.5, OD-29, TH-10mm, Zn	1	
1A	X30111A	Flat Washer M21, OD-37mm, TH-3mm, SS Part Config. May Vary	1	
2	X30112	Int. Retaining Ring, B.O. ID-2 3/8", OD-2.65", TH-0.08"	1	
3	X30024	Bearing (6206Z)	1	
4		Shim Part Config. May Vary	1	
5	X30113	Lead-In Oil Pad	1	
6	X30114-117	Slow Speed Gear Assembly (52T) (Incl. items 6A-6D)	1	
6A		Bushing	1	
6B		Roller Pin	1	
6C		Slice Spring	1	
6D		Gear, Slow Speed (52T)	1	
7	X30118	Bevel Gear (52T)	1	
8	X30014	Lever Gear (35T)	1	
9	X30018-1	Flat Washer, Zinc ID-35mm, OD-55mm, TH-1mm	1	
10	X30120-2	Clutch Gear (35T)	1	
11	X30119	Bushing	1	
12	X30133	Clutch Sleeve	1	
13	X30130	Drive Shaft	1	
13A	X30121	Round End Key H-8mm, W-8mm, L-40mm	1	
13B	X30132	Round End Key H-8mm, W-10mm, L-40mm	1	
13C	X30131	Round End Key H-10mm, W-10mm, L-55mm	1	
14	X30119	Bushing	1	
15	X30122	Clutch Gear (45T)	1	
16	X30124	Heel	1	
17	X80F10	Bearing (6207LU)	1	
18	X80D14	Int. Retaining Ring, B.O. ID-2 11/16, OD-3", TH-0.09"	1	
19	X30128	Oil Seal ID-45mm, OD-72mm, TH-12mm	1	
20	X30221	O-Ring ID-31mm, OD-37mm, TH-3mm	2	
21	X30127	Bushing	1	
22	X30129C	Stop Nut & Washer Kit Part Config. May Vary	1	
22A	X30111	Thin Hex Nut M20-1.5, OD-29, TH-10mm, Zn Part Config. May Vary	2	
22B	X30111A	Flat Washer M21, OD-37mm, TH-3mm, SS Part Config. May Vary	1	
23	X30129C	Stop Nut & Washer Kit Part Config. May Vary	1	
23A	X30129A	Ext. Hex Hd Screw M8-1.25X16mm, SS Part Config. May Vary	1	
24	X20214	Int. Retaining Ring ID-2", OD-2.210", TH-0.062", B.O.	1	
25		Cap, Shaft	1	
26	X30147	Thin Hex Nut M16-1.5, OD-24, TH-8, Zn	1	
27		Washer M16	1	
28	X10012	Bearing (6204Z)	1	
29	X30150-1	Transmission Shaft (13T) Old Style, Keyed	1	
29	X30150-2	Transmission Shaft (13T) New Style, Splined	1	
29A	X30149	Round End Key H-7mm, W-7mm, L-18mm	2	
30	X30143-1	Gear (20T) Old Style, Keyed	1	
30	X30148-2	Gear (30T) New Style	1	
31	X30144	Bushing	1	
32	X30143-1	Gear (20T) Old Style, Keyed	1	
32	X30143-2	Gear (20T) New Style, Splined	1	
33	X30141	Ext. Retaining Ring, B.O. ID-22mm, OD-24mm, TH-1mm	1	
34	X30140	Bearing (6204)	1	
35	X30147	Thin Hex Nut M16-1.5, OD-24, TH-8, Zn	1	
36		Washer, Flat M16	1	
37	X80D36	Int. Retaining Ring, B.O. ID-1 3/4", OD-2", TH-0.06"	1	
38	X10012	Bearing (6204Z)	1	

© Globe Food Equipment Company

SP30P Gearbox Components

Item	Part Number	Description	Qty	Serial Number
39	X30145	Master Shaft (14T) *, Replace with **	1	
39A	X30081	Round End Key H-6mm, W-6mm, L-30mm	1	
40	X30140	Bearing (6204) Part Config. May Vary	1	
41	X30134-139	Shifter Yoke Kit (Incl. items 41A-41H)	1	
41A		Washer, Flat M16	1	
41B		Guide, Rod Shifter	1	
41C	X01372	Lock Washer,SS M12, OD-21mm, TH-2.5mm	2	
41D	X01370	Flat Washer, Zinc M13, OD-25mm, TH-2mm	2	
41E	X30215	Hex Nut M12-1.75, Zn, OD-19mm, TH-10mm	2	
41F		Plunger, Yoke Shifter	1	
41G		Spring, Yoke Shifter	1	
41H		Spring, Retainer	1	

© Globe Food Equipment Company

INTENTIONALLY LEFT BLANK PAGE

© Globe Food Equipment Company

SP30P Motor Components

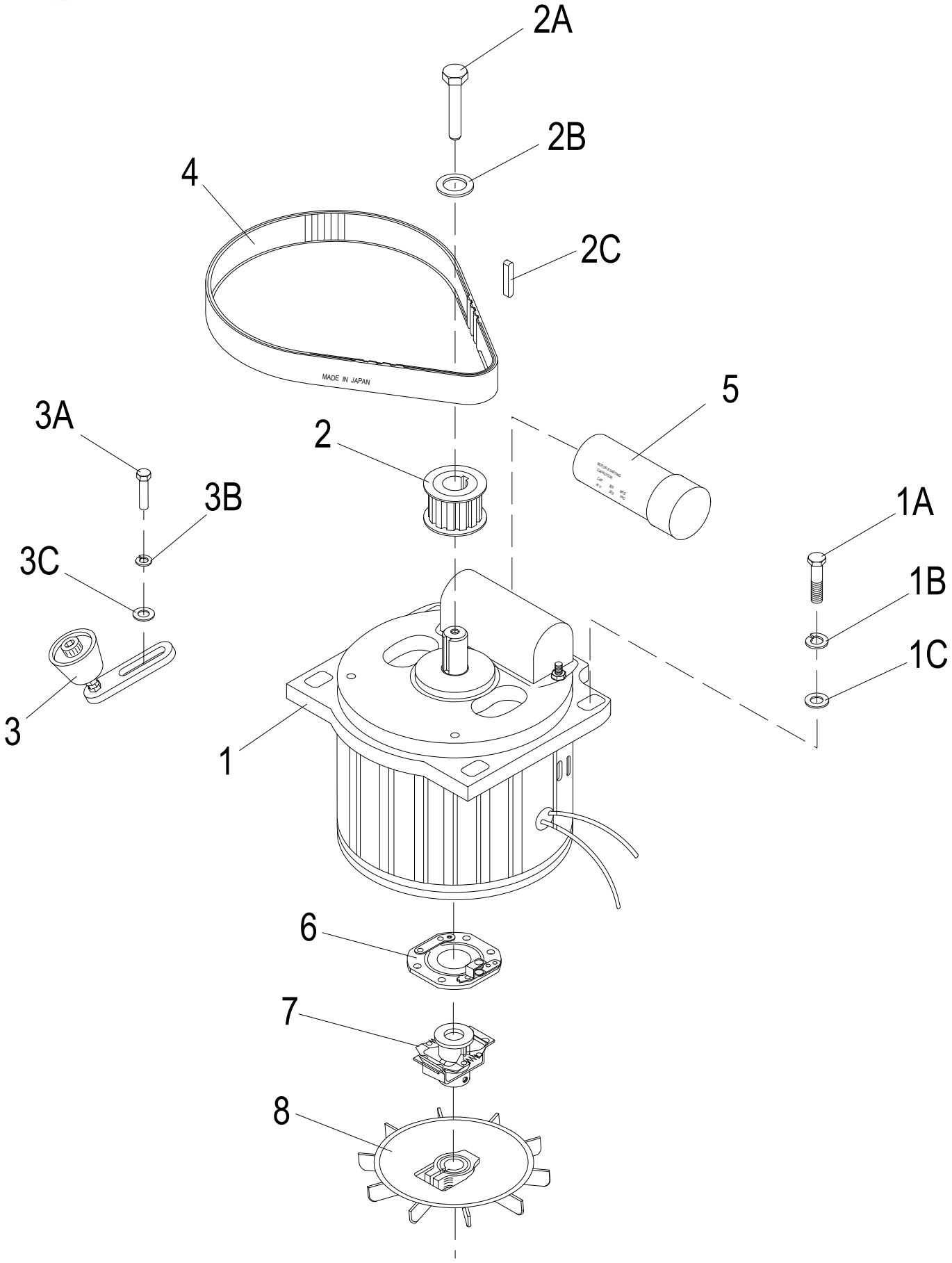

© Globe Food Equipment Company

SP30P Motor Components

Item	Part Number	Description	Qty	Serial Number
1	X30068P	Motor (220V/60HZ/1PH/12A)	1	
1	X30068P-1	Motor (208V/60HZ/3PH/12A)	1	
1	X30068P-3	Motor (240/60HZ/3PH/12A)	1	
1	X30068P-4	Motor (240V/60HZ/1PH/12A)	1	
1A	H00196	Screw	4	
2	X30071	Sprocket	1	
2	X00734	Sprocket (50HZ)	1	
2A	X30075	Ext. Hex Hd Screw M8-1.25x20mm, Zn	1	
2B	X30074	Flat Washer, Zinc M8, OD-25mm, TH-3mm	2	
2C	X40073	Round End Key, H-5mm, W-5mm, L-20mm	1	
3	X30158	Belt Tensioner	1	
3A	X40159	Ext. Hex Hd Screw, Zn, M8-1.25X25mm	2	
3B	X80D08	Lock Washer, SS M8, OD-13mm, TH-2mm	2	
3C	X10189	Flat Washer-Zinc M8, OD-12mm, TH-1mm	2	
4	X30072-1	Drive Belt S8M-880 60Hz	1	
4	X40072-1	Belt (60HZ)	1	
5	X30070-1P	Start Capacitor (500Mf)	1	
6	X10051	Platinum Switch	1	
7	X25059	Clutch	1	
8	X30061	Fan	1	

© Globe Food Equipment Company

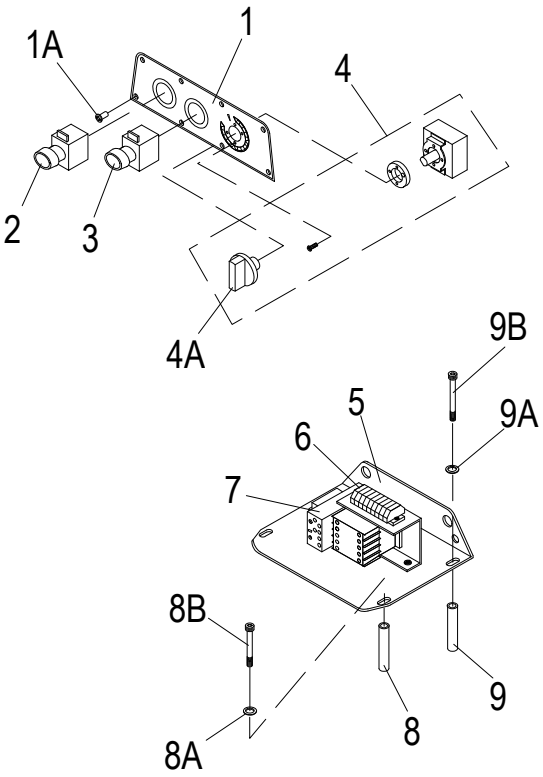

Manual Timer

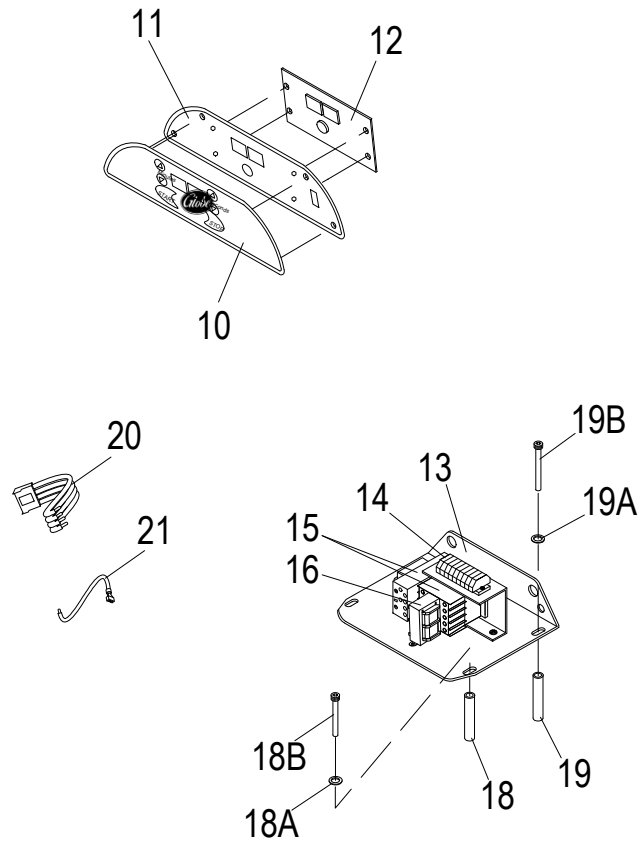

Digital Timer

© Globe Food Equipment Company

Item	Part Number	Description	Qty	Serial Number
1	X30005	Control Panel	1	
1A	X30204	Truss (Extra Wide) Hd Screw M4-0.7X10mm	8	
1B	X30009	Gasket, Control Panel (Not Shown)	1	
2	X10050	Emergency Stop Button	1	
3	X30007	Start Button	1	
3A	X30007-1	Boot, Start/Stop Switch Button (Not Shown)	2	
3B	X30007-1B	Light Bulb, Start Button (Not Shown)	1	
4	X10137	Timer Kit	1	
4A	X10137-1	Timer Knob	1	
5	X30013	Mounting Plate & Bracket	1	
6	X40012	Connecting Block Kit	1	
6	X10029-2G	Connecting Block Gray (2C)	7	
6	X10029-4R	Connecting Block Orange (4R)	1	
6	X30012-EC	Connecting Block End Cap	1	
7	X30154P	Elec. Relay Kit (220-240V/50-60Hz/3Ph/18A)	1	
8	X30153	Support Tube	2	
8A		Washer M8 Flat	2	
8B	X30086	Cap Hd Screw, Hex M8-1.25X100mm, B.O.(1/2Thread)	2	
9	X30085	Support Tube	2	
9A		Washer M8 Flat	2	
9B	X30010	Cap Hd Screw, Hex M8-1.25X90mm, B.O.(1/2 Thread	2	
10	X00566	Membrane	1	
11	X01337	Aluminum Panel Kit	1	
12	X00568	Control Board	1	
13	X30013	Mounting Plate & Bracket	1	
14	X40012	Connecting Block Kit	1	
14	X10029-2G	Connecting Block Gray (2C)	7	
14	X10029-4R	Connecting Block Orange (4R)	1	
14	X10029-EC	Connecting Block End Cap	1	
15	X30154P	Elec. Relay Kit (220-240V/50-60Hz/3Ph/18A)	1	
15A	X30011PABB	Contactor (220-240V/50-60Hz/1-3Ph/18A)	1	
15B	X30154PABB	Relay (50-60Hz/14A)	1	
16	X00569	Transformer	1	
17	X00570	Fuse (250V/1A-Time Delay) (Not Shown)	1	
18	X30153	Support Tube	2	
18A	X10189	Flat Washer-Zinc M8, OD-12mm, TH-1mm	2	
18B	X30086	Cap Hd Screw, Hex M8-1.25X100mm, B.O.(1/2Thread)	2	
19	X30085	Support Tube	2	
19A	X10189	Flat Washer-Zinc M8, OD-12mm, TH-1mm	2	
19B	X30010	Cap Hd Screw, Hex M8-1.25X90mm, B.O.(1/2 Thread	2	
20	X00675-1	Wire Harness	1	
21	X00676	Control Board Wire	2	
22	X80J11	Terminal Block (Not Shown)	1	

© Globe Food Equipment Company

SP30P Bowl Scraper Components

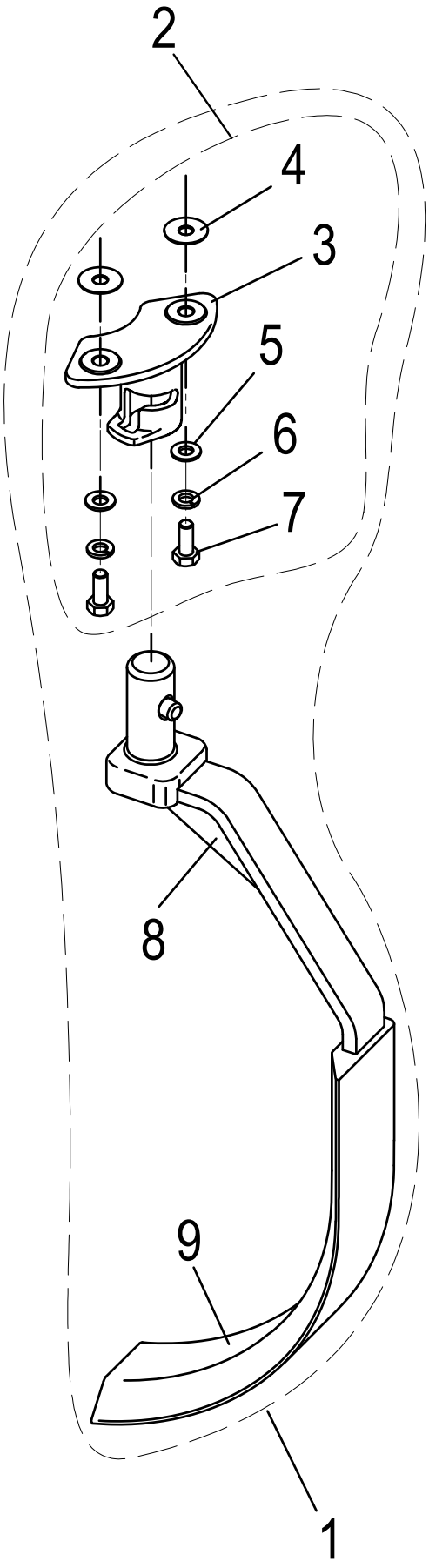

© Globe Food Equipment Company

SP30P Bowl Scraper Components

Item	Part Number	Description	Qty	Serial Number
1	XXSCRP-30	Bowl Scraper Assembly	1	
2	X02000	Mounting Kit	1	
3		Scraper Mounting Hub	1	
4		Washer	2	
5	H03142	Mounting Washer	2	
6	H03143	Mounting Lock Washer	2	
7	H03144	Mounting Screw	2	
8		Scraper Arm	1	
9	X40515	Rubber Scraper	1	

© Globe Food Equipment Company

SP30P Wiring Diagram, 220V Single Phase

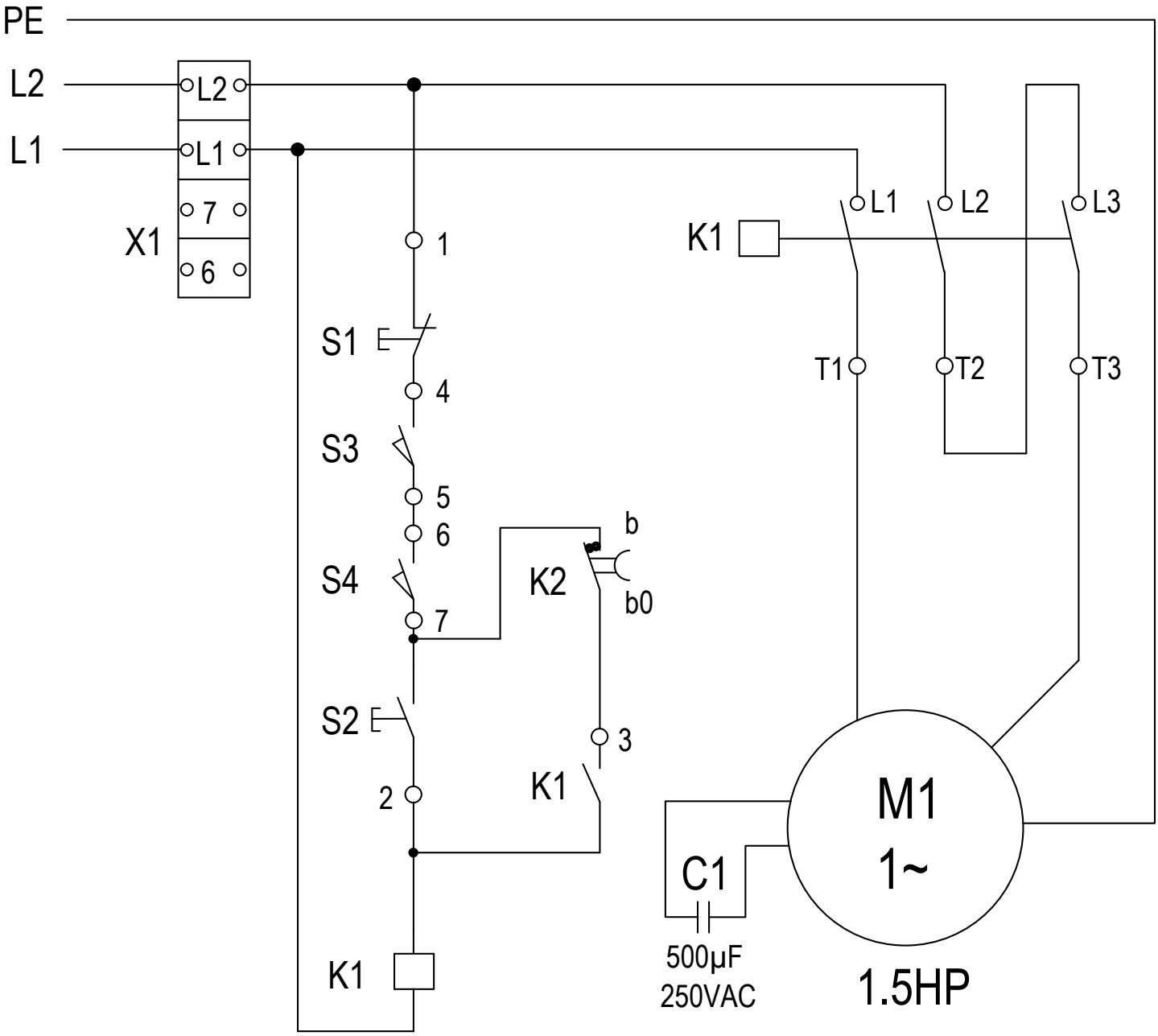

Item	Description	Qty
C1	Capacitor	1
S1	Emergency Stop Button	1
S2	Start Button	1
S3	Microswitch (Bowl Lift)	1
S4	Microswitch (Interlock Guard)	1
K1	Contactor	1
K2	Timer	1
M1	Motor, 1Hp Single Phase 220V	1

© Globe Food Equipment Company

SP30P Wiring Diagram, Single Phase, Digital Timer

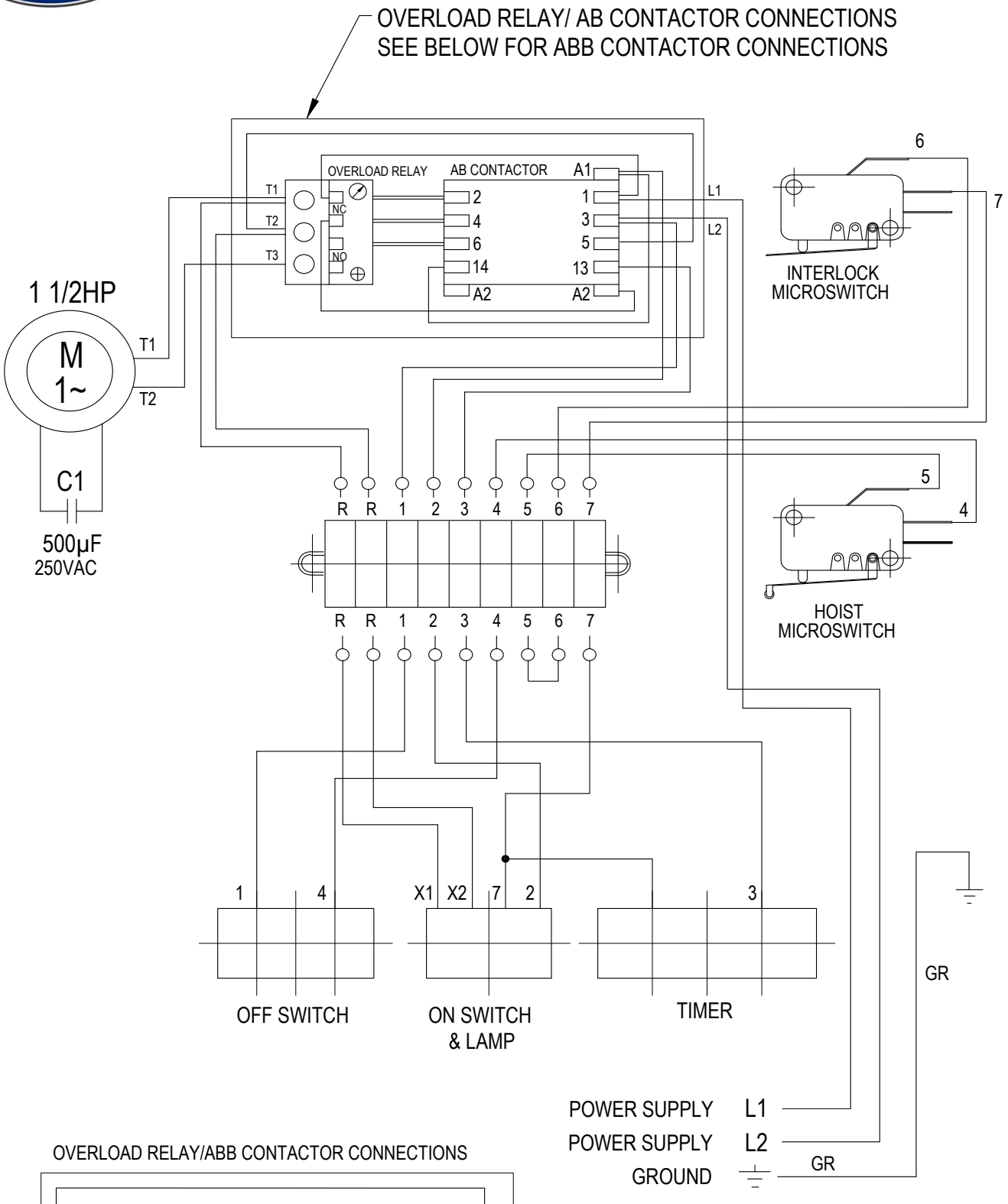

OVERLOAD RELAY/ABB CONTACTOR CONNECTIONS

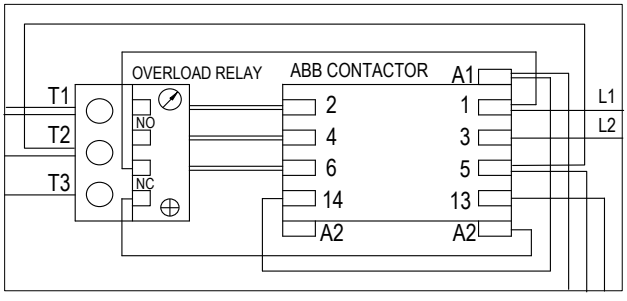

© Globe Food Equipment Company

SP30P Wiring Diagram, Single Phase, Digital Timer

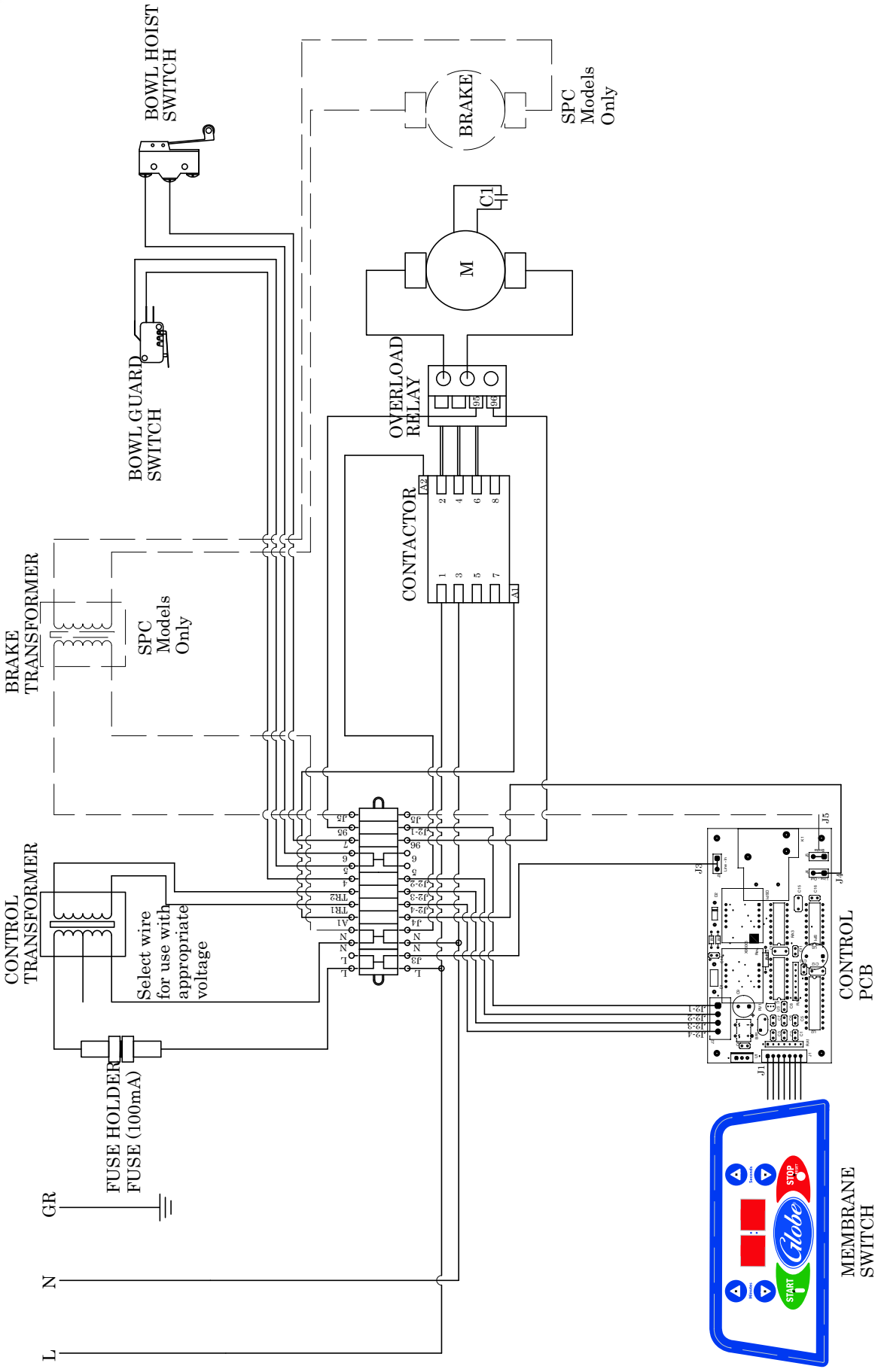

© Globe Food Equipment Company